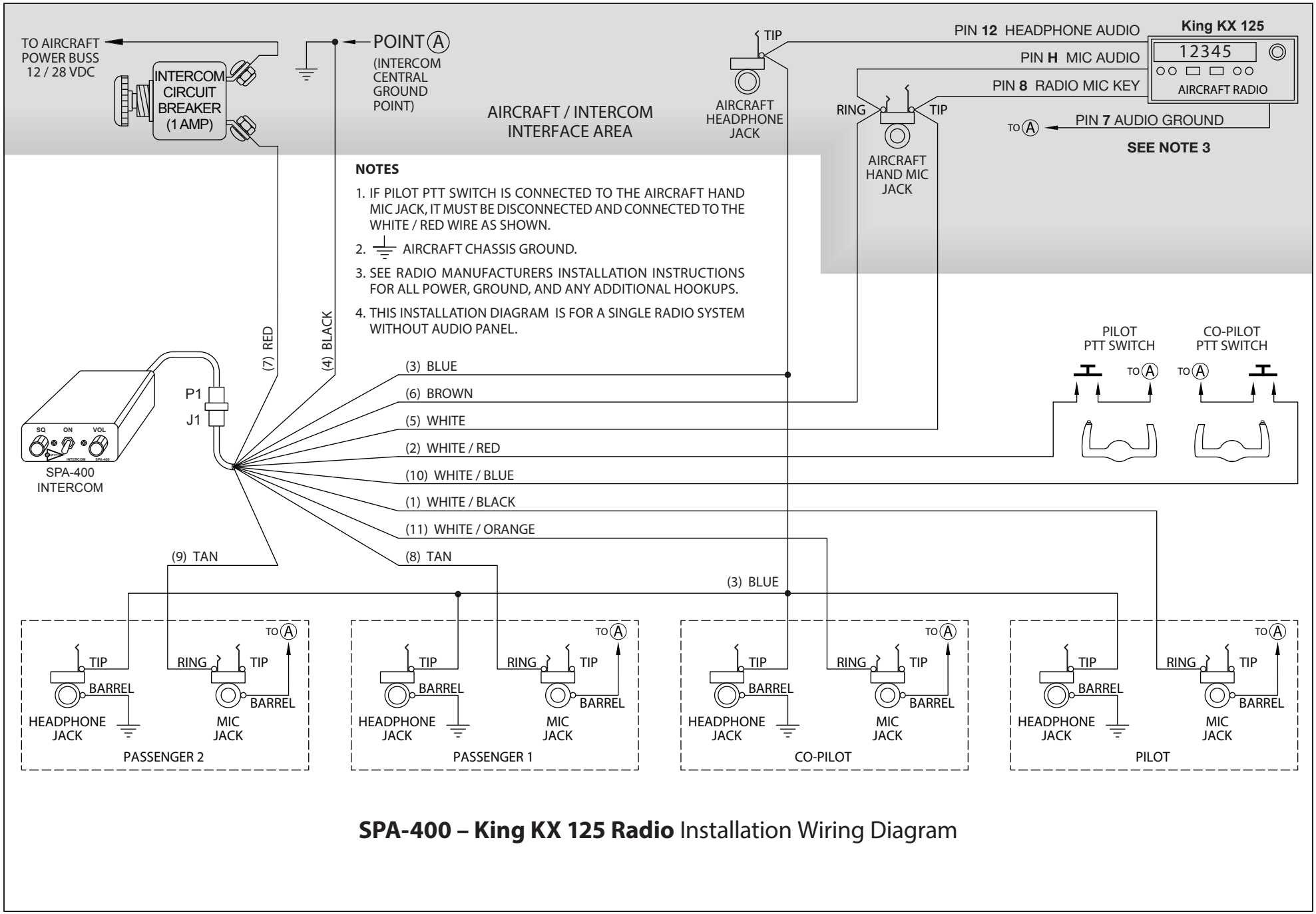

SPA-400 – King KX 125 Radio Installation Wiring Diagram

Sigtronics Corporation
178 East Arrow Highway
San Dimas, CA 91773

Telephone: (909) 305-9399
E-mail: info@sigtronics.com
Web: www.sigtronics.com

The above information has been checked for accuracy, however it is presented for use as is. Sigtronics is not liable for damage to radio equipment using this data. It is the sole responsibility of the technician to verify the usability of this information for their particular radio.