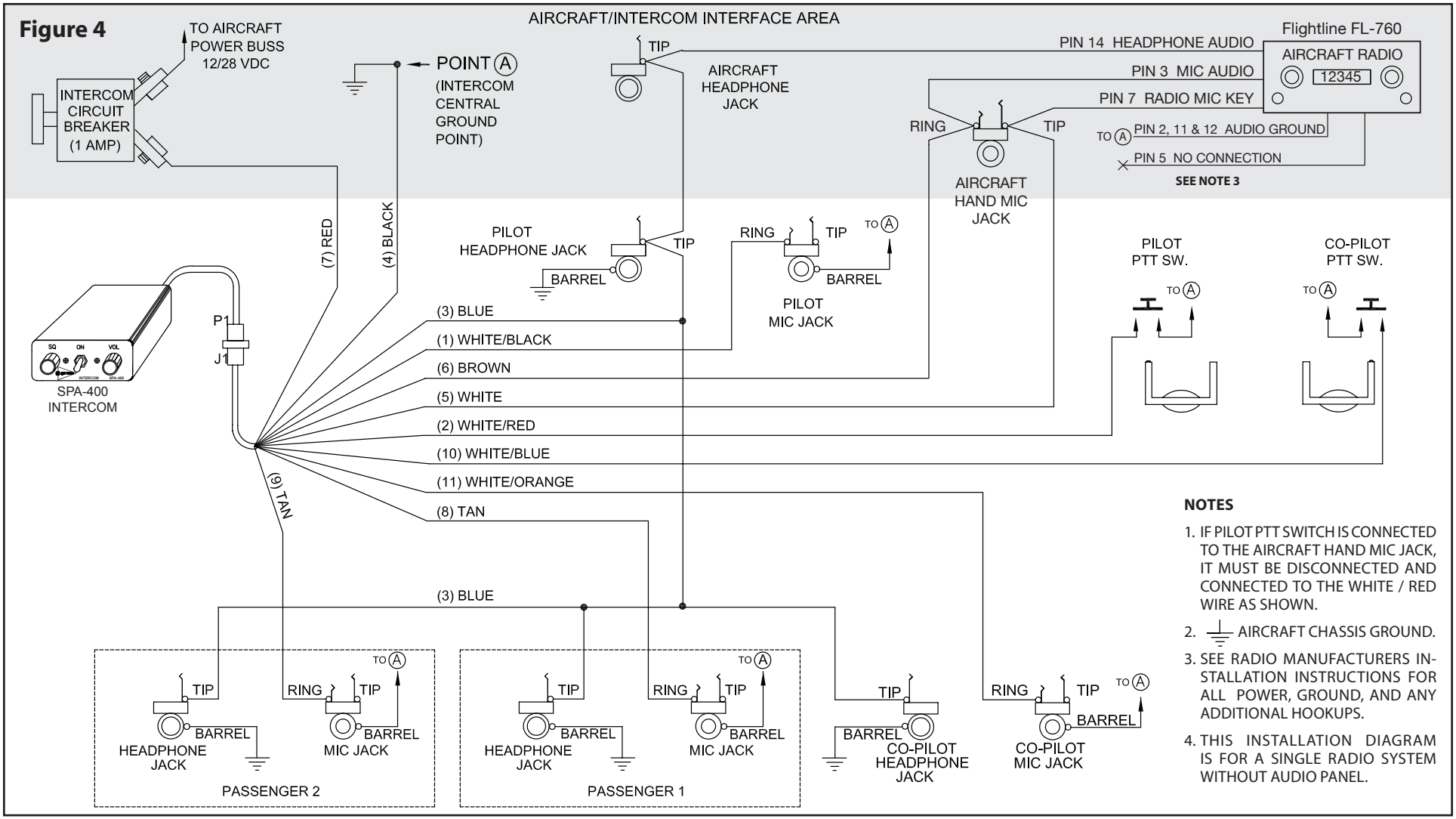

SPA-400 – Flightline FL-760 Radio Installation Wiring Diagram

Sigtronics Corporation
178 East Arrow Highway
San Dimas, CA 91773

Telephone: (909) 305-9399
E-mail: info@sigtronics.com
Web: www.sigtronics.com